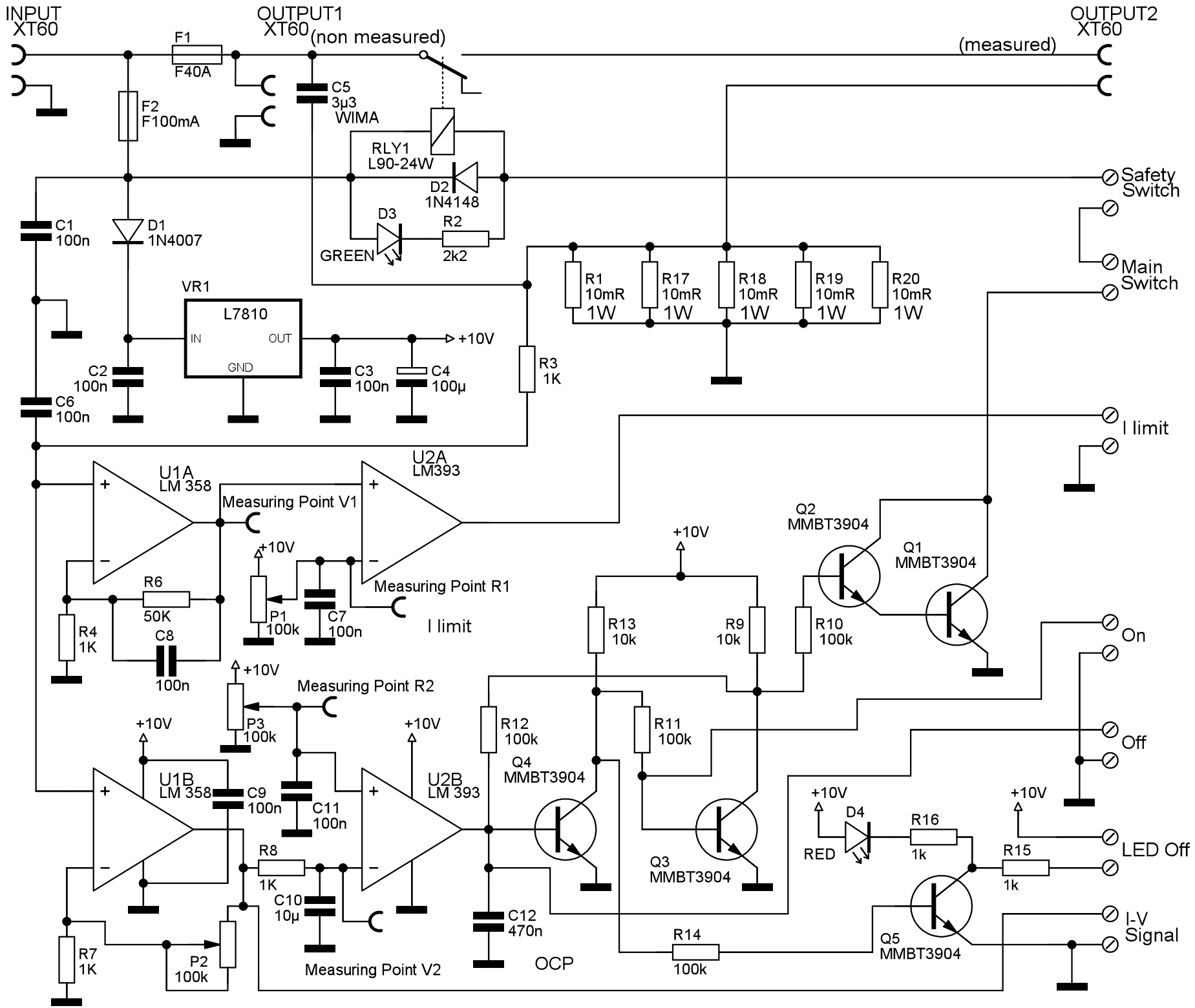
INPUT
XT60
OUTPUT1
XT60
(non measured)
OUTPUT2
XT60
(measured)
F1
F40A
F2
F100mA
C5
3µ3
WIMA
RLY1
L90-24W
D2
1N4148
D3
GREEN
R2
2k2
C1
100n
D1
1N4007
VR1
L7810
IN
OUT
GND
+10V
C2
100n
C6
100n
C3
100n
C4
100µ
R3
1K
R1
10mR
1W
R17
10mR
1W
R18
10mR
1W
R19
10mR
1W
R20
10mR
1W
Safety
Switch
Main
Switch
I limit
U1A
LM 358
U2A
LM393
Measuring Point V1
Measuring Point R1
I limit
R6
50K
R4
1K
C8
100n
P1
100k
C7
100n
Q2
MMBT3904
Q1
MMBT3904
R13
10k
R9
10k
R10
100k
On
Off
Measuring Point R2
P3
100k
U1B
LM 358
C9
100n
C11
100n
U2B
LM 393
R12
100k
R11
100k
Q4
MMBT3904
Q3
MMBT3904
D4
RED
R16
1k
R15
1k
LED Off
R8
1K
C10
10µ
C12
470n
R14
100k
Q5
MMBT3904
I-V
Signal
R7
1K
P2
100k
Measuring Point V2
OCP